F-MATIC®

AirClip™

AirClip™ is a compact bowl clip air freshener that provides continuous fragrance and odor control for up to 30 days. Powered by TMM® odor-neutralizing technology, it is made to clip discreetly onto the side of a toilet bowl, while its versatile design also allows it to be placed throughout the restroom wherever additional odor control is needed.

Flexible Placement
use throughout the restroom

30-day performance
long-lasting odor control

Made in
USA

TMM® Odor-Neutralizing Technology

Flexible Placements

AirClip™ goes beyond the bowl. Its compact, versatile design allows it to be placed throughout the restroom, helping target fragrance and odor control where it's needed most.

Easy to Use

Simply clip it onto a restroom surface.

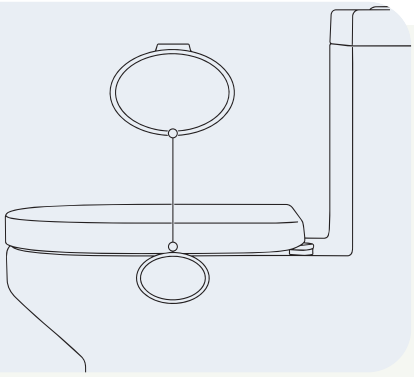

F-MATIC | AirClip™

Choose the right AirClip™

FRAGRANCE OFFERINGS

LIGHT — MODERATE — INTENSE

- Green Apple — TB100NGR
- Cucumber Melon — TB150NCM
- Orange Grove — TB200NOR
- Soothing White Tea — TB450NWT
- Mountain Breeze — TB300NMT
- Cherries Jubilee — TB500NCH
- Naturally Clean — TB600NNA
- Tropical Paradise — TB900NTR
- Sweet Lemon — TB250NL
- Lavender Morning — TB950NLM

AIRCLIP TECHNICAL SPECS

Case Weight	9.00 lbs	**Case Qty**	60 units
Lifespan	30 days	**Case Dimensions**	21.50” x 19.25” x 6.00”
Country of Origin	Made in USA		

IDEAL APPLICATIONS

Office Buildings	Naturally Clean TB600NNA / Green Apple TB100NGR / Mountain Breeze TB300NMT
Healthcare/Medical	Naturally Clean TB600NNA / Lavender Morning TB950NLM / Soothing White Tea TB450NWT
Schools/Universities	Naturally Clean TB600NNA / Green Apple TB100NGR / Cucumber Melon TB150NCM
Industrial/Warehouses	Orange Grove TB200NOR / Cherries Jubilee TB500NCH / Mountain Breeze TB300NMT
Hotels/Hospitality	Soothing White Tea TB450NWT / Tropical Paradise TB900NTR
Restaurants/Food Service	Sweet Lemon TB250NL / Orange Grove TB200NOR
Fitness/Recreation	Mountain Breeze TB300NMT / Orange Grove TB200NOR / Cherries Jubilee TB500NCH
Government/Municipal	Naturally Clean TB600NNA / Sweet Lemon TB250NL / Mountain Breeze TB300NMT

Ready to Order?

Request a sample today.

800.824.9994
info@fmatic.com
fmatic.com

Scan the QR code to get in touch